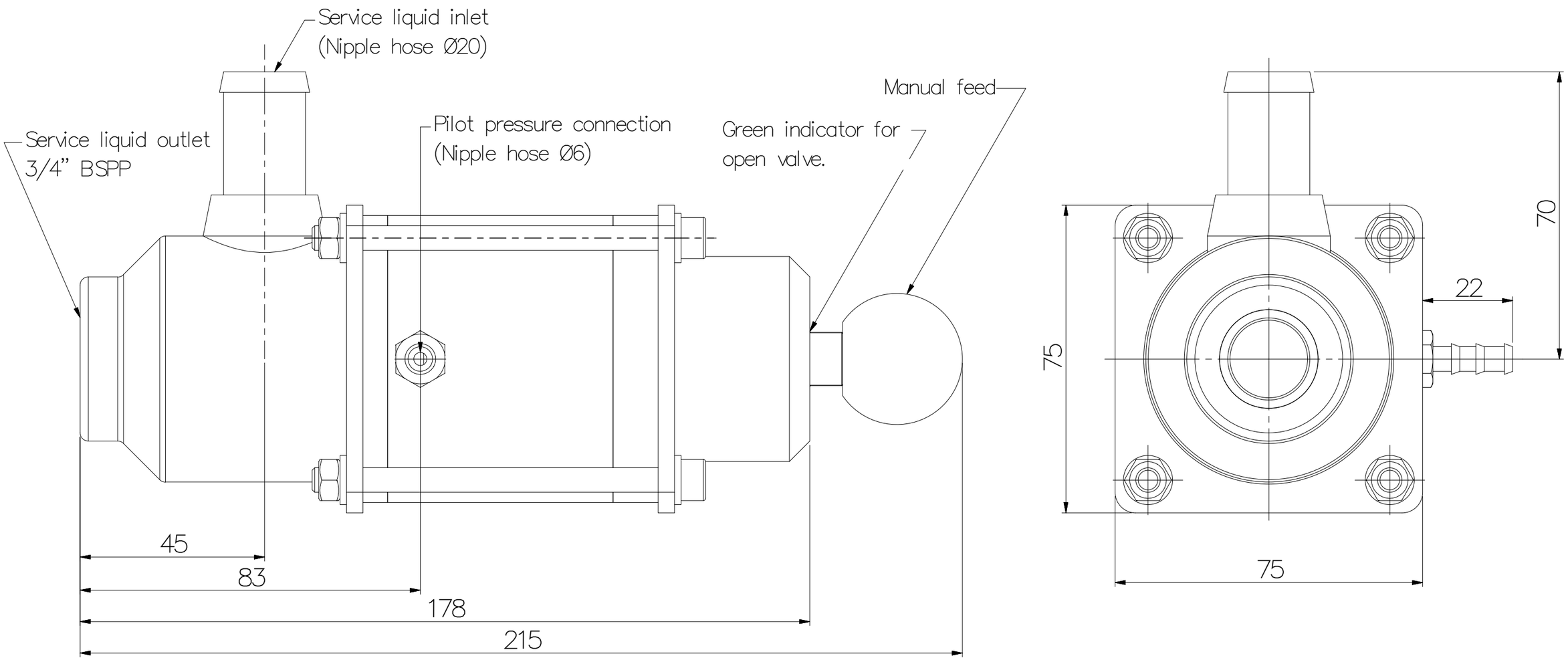
Service liquid inlet
(Nipple hose Ø20)
Service liquid outlet
3/4" BSPP
Pilot pressure connection
(Nipple hose Ø6)
Green indicator for
open valve.
Manual feed
45
83
178
215
70
22
75
75